POST PRESS

MAILROOM

BOOKBINDERY

We find the right way

RS 2872 Vertical Twist Conveyor

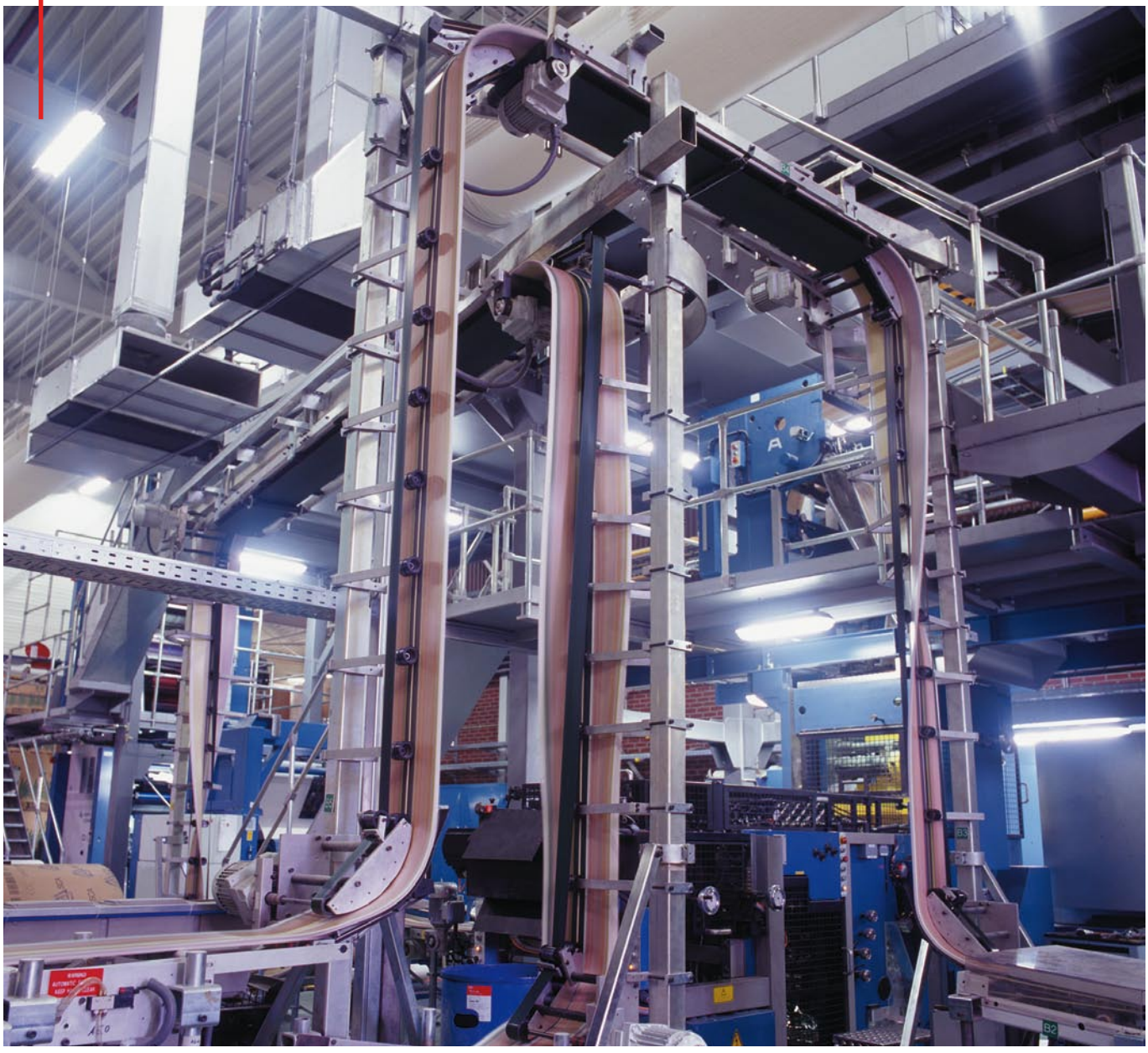

RIMA SYSTEM

Application

The RS 2872 Vertical Twist Conveyor is a simple alternative to complex floor conveyor installations, clearing the floor area for traffic and providing machine access in a limited space. The Vertical Twist Conveyor is an attractive low cost solution for the transport of shingled signatures up to 32 pages A4 in heatset, coldset and semicommercial applications. As the RS 2872 transports the shingled stream up or down between two flat belts, the direction of the stream can be changed up to 180° (vertical twist).

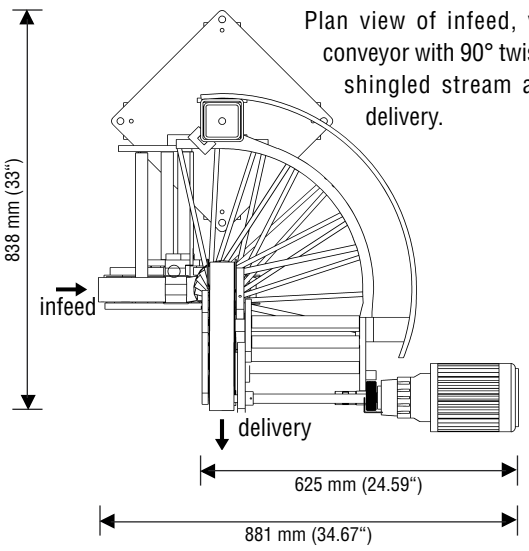

Plan view of infeed, vertical conveyor with 90° twist of the shingled stream and top delivery.

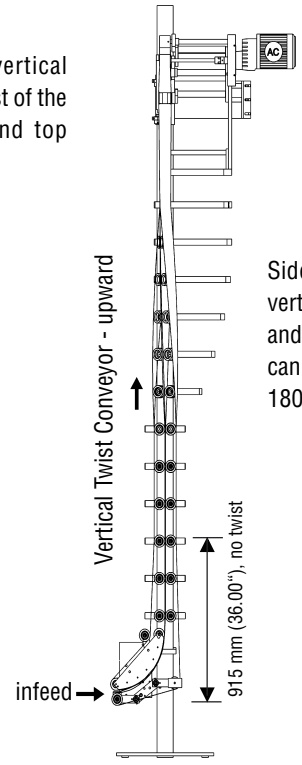

Side views of infeed, vertical twist conveyor and top delivery. Twist can be between 0° and 180°.

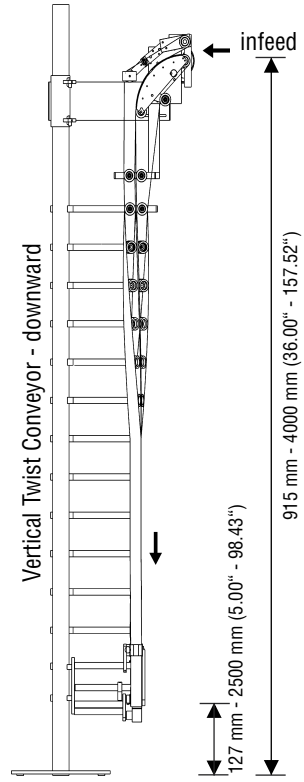

Technical Data

	Minimum	Maximum
Pick-up height	127 mm (5.00“)	2500 mm (98.43“)
Conveying height (must be approved by RIMA-SYSTEM)	915 mm (36.00“) add 230 mm (9.00“) per 15° twist	4000 mm (157.52“) depending on format and pagination
Twist of shingled stream	0°	180°
Copy thickness	4 pages A4	32 pages A4 @ 80 g/m² (other on request)
Copy width		500 mm (19.68“)
Product orientation	Spine leading	
Conveyor speed	67 m/min (220 ft/min)	

Detailed product information available on request. The manufacturer reserves the right to change the technical specification without prior notice (RS 2872-E-06/07).

RIMA SYSTEM
www.rima-system.com

RIMA-SYSTEM Atlanta LLC, USA
2840 Johnson Ferry Road, Suite 250
Marietta, GA 30062-8309
Phone +1 - 770 - 998 5622
Fax +1 - 770 - 998 5680

RIMA-SYSTEM Corporate Office, USA
5340 Argosy Drive
Huntington Beach, CA 92649
Phone +1 - 714 - 893 4534
Fax +1 - 714 - 892 7010

RIMA-SYSTEM Europe, Germany
Postfach 27 03 49, D - 40526 Düsseldorf
Monschauer Str. 1, D - 40549 Düsseldorf
Phone +49 - 211 - 950090
Fax +49 - 211 - 9500911

RIMA-SYSTEM Far East Pte Ltd, Singapore
11 Stamford Road, # 03-10 Capitol Building
Singapore 178884
Phone +65 - 6 338 5580
Fax +65 - 6 338 5582